SPACECOM

VZ16160RAI

[SPECIFICATIONS]

Image Size: 1 2/3 1/2 1/3 1/4

Focal Length :	16 - 160mm
Maximum Relative Aperture :	1:2.2(Tele End 1:2.7)
Iris :	F2.2 - Approx. 1200 (With ND Spot Filter)
Zoom Ratio :	10X
Sensitivity Adjustment :	0.5 - 1.0Vp-p(Image Signal)
Angular Field of View :	43.6 X33.4 deg. at 16mm 4.6 X 3.4 deg. at 160mm
Image Format :	12.8X9.6mm(D16mm)
Minimum Object Distance :	1.1m(From Front Vertex)
Object Dimensions at M.O.D. :	88.0X66.0cm at 16mm 8.8X 6.5cm at 160mm
Optical Back Focal Distance :	18.6mm(In Air)
Flange Back :	17.526mm
Input Signal :	Composite Video Signal or Video Signal
Photometry Range :	Approx. 40% - 70% Variable to Vp-p
Input Impedance :	High Impedance
Operation : Zoom :	Motorized(DC+/-6.4V, Max80mA) Speed Approx. 5.5sec.
Focus :	Motorized(DC+/-6.4V, Max80mA) Speed Approx. 8sec.
Iris :	EE (DC+8.5 to 13V : Fixed Voltage, Max60mA) Speed Within 3.5sec.
EE Mechanism :	The built-in EE Amp amplifies the difference between the video signal from the camera and the preset Iris signal level. It causes the Iris to change size.
EE Accuracy :	With Input Video Signal 0.7Vp-p Within+/-15% of Mean Value
Operation Temperature :	-10 to +50
Mount :	C-Mount(Adjustable Lens Position)
Front Thread :	77mm P0.75
Size, Weight :	117X100X176mm, Approx. 1.4kg

[COMPOSITION]

Lens 1
Lens Cap 1
Dust Cap 1

4-Conductor Connector (Female) 1
(Any 4-conductor cable of external dia 6mm to be prepared separately.)

[DIMENSIONS]

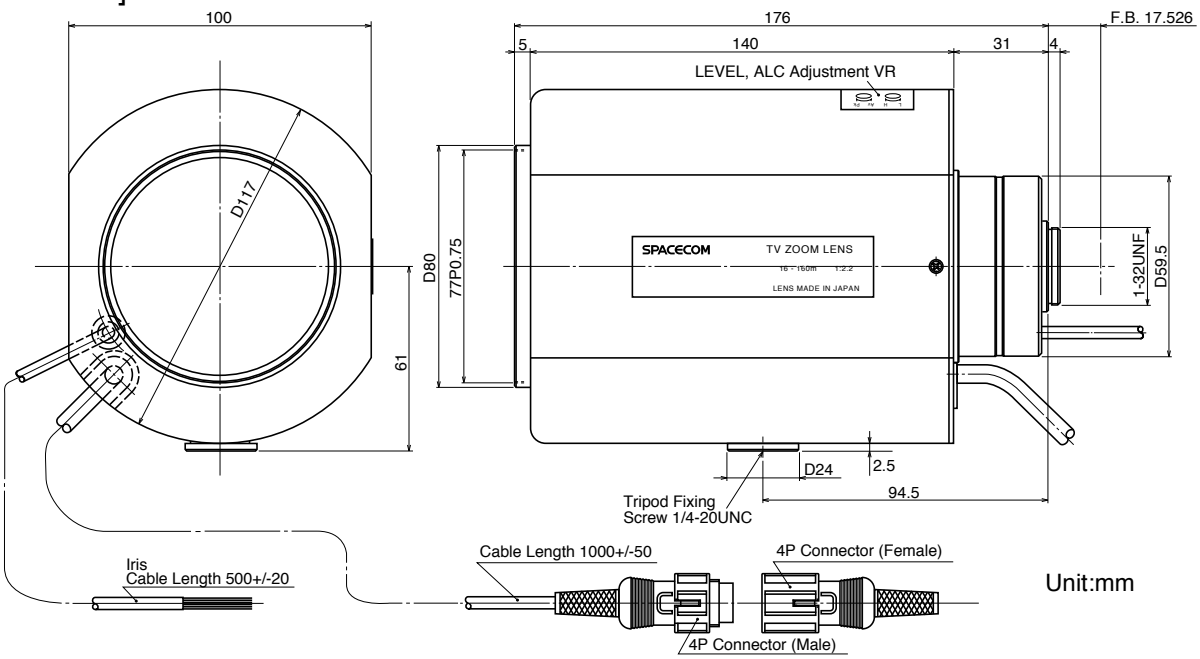

[CIRCUIT DIAGRAM]

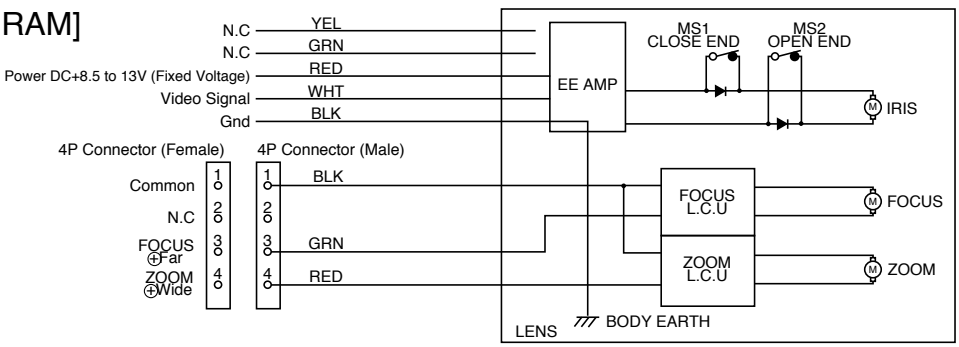

SUBJECT TO CHANGE WITHOUT NOTICE.